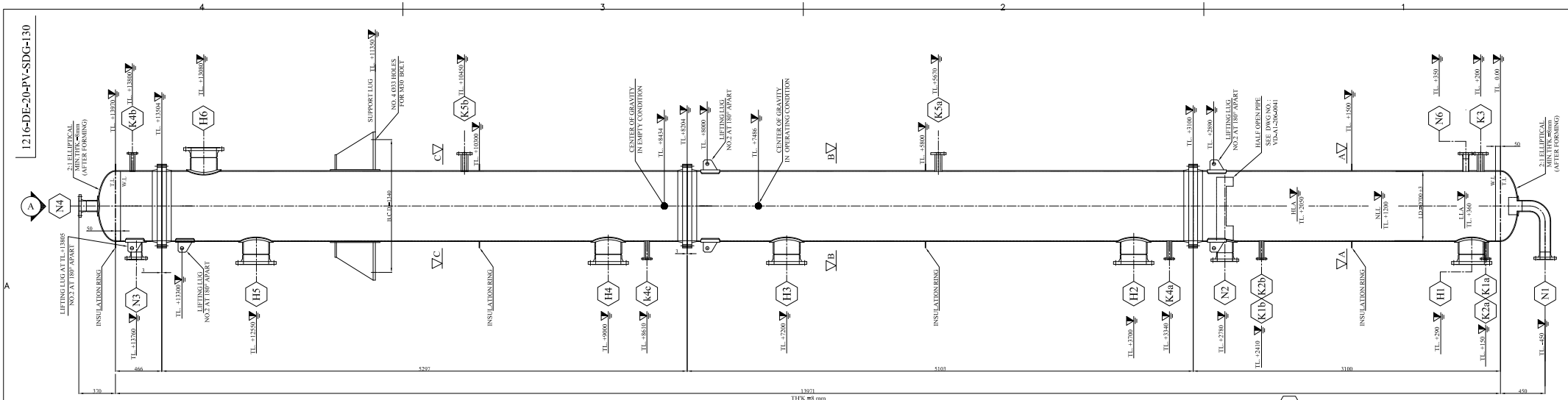

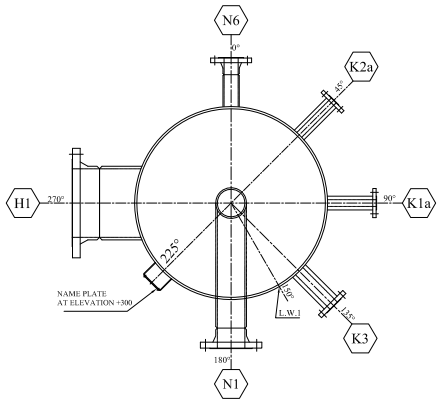

SECTION <A-A>
SC.=2/1

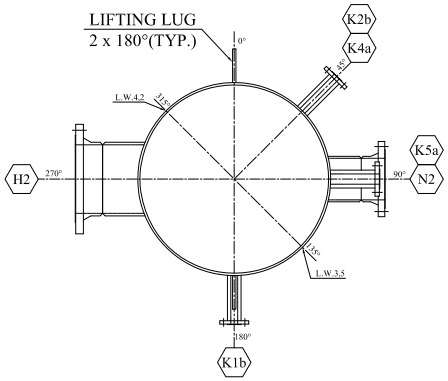

SECTION <B-B>
SC.=2/1

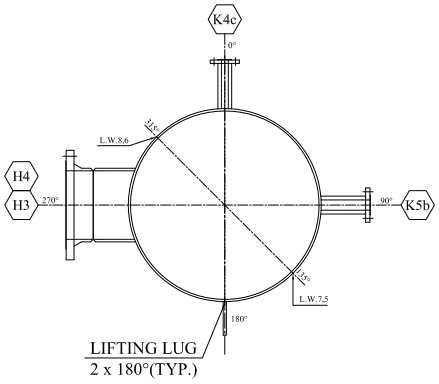

SECTION <C-C>
SC.=2/1

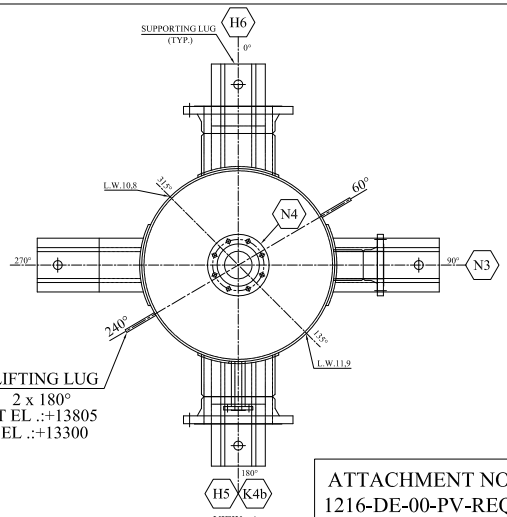

VIEW <A>
SC.=2/1

ATTACHMENT NO.14.7
1216-DE-00-PV-REQ-206

NOZZLE ORIENTATION & LOADING DATA ARE HOLD

MATERIALS		
NO	DESCRIPTION	MATERIAL
1	SHELL / REINFORCEMENT PAD	SA 240-304
2	HEADS	SA 240-304
3	NOZZLE NECK PLATE	SA 240-304
4	NOZZLE NECK PIPE	SA 312-304
5	WELDING FITTINGS	SA 403-WP304
6	FLANGES / FORGING	SA 182-F304
7	SKIRT TOP / BOTTOM	--
8	SADDLES / LEG SUPPORT/LUG	SA 240-304/SA 516-70
9	WELDED-IN PARTS	SS 304
10	INTERNAL PIPING	SS 304
11	REMOVABLE INTERNALS	SS 304
12	INTERNAL FITTINGS	SS 304
13	PRESSURE BOLTS / STUDS	SA 193-B8
14	PRESSURE NUTS	SA 194-8
15	INTERNAL BOLTS / STUDS	SS 304
16	INTERNAL NUTS	SS 304
17	PRESSURE GASKETS	SPIRAL WOUND TYPE FILLER : GRAPHIT.HOOP:SS316
18	INTERNAL GASKETS	--
19	STIFFENING RINGS / GUSSET	--
20	INSULATION SUPPORT RINGS	SA 240-304
21	FIRE PROOFING SUPPORT	--
22	LIFTING / TAILING LUGS	SA 240-304 / SA 516-70
23	WELDED-ON PARTS	SA 240-304
24	ANCHOR BOLTING	A-325
25	STRUCTURAL BOLTING	A36
26	NAME PLATE	S.S.304
27	NAME PLATE BRACKET	SA 240-304
28	TRAYS	--
29	EARTH TERMINAL	S.S.
30	GIRTH FLANGE	--
31	BASE RING / CHAIRS	--
32	DEMISTER/WIRE MESH	--

LOAD AT SUPPORT BASE						
WEIGHT			EARTHQUAKE LOADS (OPE.)		WIND LOADS (OPE.)	
ERECTION (kg)	OPERATION (kg)	TEST (kg)	SHEAR (kN)	MOMENT (kN.m)	SHEAR (kN)	MOMENT (kN.m)
3182	6765	9685	22	149	33	140

CONNECTIONS												
"NOZZLE MARK"	NO.	SIZE (in)	FLANGES			NOZZLE NECK		"REINFORCE PLATE"		FINISHING	"NOZZLE PROJ. (mm)"	SERVICE
			"RATING (LB)"	TYPE	FACING	SCH.	"THK (mm)"	MAT.	"O.D. (mm)"	"THK (mm)"		
N1	1	4	150	W.N.	R.F.	40S	--	--	200	8	SERRATED	540	LIQUID OUTLET
N2	1	6	150	W.N.	R.F.	40S	--	--	250	8	SERRATED	560	STEAM INLET
N3	1	4	150	W.N.	R.F.	40S	--	--	200	8	SERRATED	540	FEED INLET
N4	1	4	150	W.N.	R.F.	40S	--	--	200	8	SERRATED	370	VAPOR OUTLET
N6	1	2	150	W.N.	R.F.	80S	--	--	--	--	SERRATED	540	UTILITY NOZZLE (STEAM OUT)
K1A	1	1	150	L.W.N	R.F.	--	--	--	--	--	SERRATED	540	LICA
K1B	1	1	150	L.W.N	R.F.	--	--	--	--	--	SERRATED	540	LICA
K2A	1	1	150	L.W.N	R.F.	--	--	--	--	--	SERRATED	540	LG
K2B	1	1	150	L.W.N	R.F.	--	--	--	--	--	SERRATED	540	LG
K3	1	1.5	300	L.W.N	R.F.	--	--	--	--	--	SERRATED	540	TI
K4A	1	1	150	L.W.N	R.F.	--	--	--	--	--	SERRATED	540	PDIA
K4B	1	1	150	L.W.N	R.F.	--	--	--	--	--	SERRATED	540	PDIA
K4C	1	1	150	L.W.N	R.F.	--	--	--	--	--	SERRATED	540	PDIA
K5A	1	1.5	300	L.W.N	R.F.	--	--	--	--	--	SERRATED	540	TW
K5B	1	1.5	300	L.W.N	R.F.	--	--	--	--	--	SERRATED	540	TW
H 1-5	5	10	150	W.N.	R.F.	40S	--	--	350	8	SERRATED	590	HANDHOLE
H 6	1	10	150	W.N.	R.F.	40S	--	--	350	8	SERRATED	590	HANDHOLE

CODES AND STANDARDS	
DESIGN CODE	ASME SEC. VIII, DIV. 1 , 2004
WIND SPECIFICATION	UBC 97 - EXPO. D
EARTHQUAKE SPECIFICATION	UBC 97 - ZONE 4
ENGINEERING STANDARD SPECIFICATION FOR TOWERS	1216-DE-00-PV-ESS-243
STANDARD DRAWING FOR P.V.	1216-DE-00-PV-SDG-240
PAINTING SPECIFICATION	1216-DE-00-PI-ESS-409
PIPES	ASME B36 - 10
FLANGES	ASME B16.5 (ASME B 16.47 B FOR NPS LARGER THAN 24")
FITTINGS	ASME B16.9
GASKETS	API-601
THREAD BOLTS	ASME B1-1 2A
THREAD NUTS	ASME B1 - 1 2B

DESIGN DATA			
OPE. PRESSURE (bara) TOP/BOTTOM	1.9 / 1.92	SHELL JOINT EFFICIENCY	1
OPE. TEMPERATURE (°C) TOP/BOTTOM	80/116	HEADS JOINT EFFICIENCY	1
DESIGN PRESSURE (barg)	3.5	X-RAY EXAMINATION (SHELL & HEAD)	FULL(BEFORE PWHT)
DESIGN TEMPERATURE (°C)	170	ULTRASONIC EXAMINATION	—
VACUUM CONDITION	FULL VACUUM	SHELL CORROSION ALLOWANCE (mm)	0
HYDROSTATIC TEST PRESSURE (barg)	7.6	HEADS CORROSION ALLOWANCE (mm)	0
CAPACITY (m3)	5.38	PWHT	NO
CONTENTS	HC+CO2+H2O+H2S+H2O	INSULATION THK (mm) / TYPE	90 (kit)
DENSITY (Kg / m3) (Liq /Vap)	948.4 / 1.15	FIREPROOFING(mm)	—
MIN. DESIGN METAL TEMPERATURE (°C)	0	TOTAL PRESSURE DROP (mbarg)	—

NOTES :

1)-ALL DIMENSIONS ARE IN mm UNLESS OTHERWISE SPECIFIED.
2)-INDICATED THICKNESSES ARE THE MINIMUM ACCEPTABLE AFTER FABRICATION.
3)-PROJECTION OF NOZZLES IS MEASURED FROM FLANGE FACE TO CENTER LINE OF VESSEL OR FLANGE FACE TO T.L.
4)-FLANGE BOLT HOLES SHALL STRADDLE NORTH-SOUTH CL. OR NATURAL HORIZONTAL AND VERTICAL CL. OF VESSEL.
5)-REINFORCING PLATES SHALL BE PNEUMATIC TESTED AT THE PRESSURE OF 0.5 BARG, USING SOAP SOLUTIONS AND TEL TEIL HOLE SHOULD BE CONSIDERED ON IT.
6)-FOR PLATE MATERIAL DIMENSIONING CARE SHOULD BE TAKEN TO ALLOW FOR 3 mm SHRINKAGE ALLOWANCE PER SEAM.
7)-ALL PIPES WELDED TO VESSEL MUST BE ROUNDED AT INNER EDGE BY 3mm RADIUS.
8)-NOZZLE NECKS MADE FROM PLATES MUST HAVE FULL RADIOGRAPHY.
9)-ANY WELD LINE CONSIDED TO NOZZLES MUST HAVE FULL RADIOGRAPHY.
10)-ANY WELD SEAM UNDER THE PAD SHALL BE GROUND SMOOTH AND RADIO GRAPHED FOR ITS ENTIRE HIDDEN LENGTH PLUS 100 mm. ON EACH SIDE.
11)-FLANGE FACE IS SERRATED FINISH WITH 125 TO 250 MICRO in. (3.2 TO 6.3 MICROm.) RA. UNLESS SPECIFIED BY NOTE 17.
12)-WELDING CODE WILL BE DEFINED IN W.P.S. BOOK.
13)-ALL INTERNAL PARTS SHALL BE REMOVABLE THROUGH MANHOLE .
14)-STANDARD:
PIPE ASME B 36.10
FLANGE ASME B 16.5 (FOR LARGE FLANGE (GREATER THAN 24): ASME B16.47 - SERIES B
15)-SEISMIC MOMENTS AND SHEARS HAVE BE DEVIDED BY 1.4.
16)-ALL WELDS CONTINUOUS EXCEPT AS NOTED.
17)-FOR ALLOWABLE NOZZLE LOAD REFER TO "1216-DE-00-PV-ESS-242"
18)-ALUMINUM FOIL SHOULD BE USED INSTEAD OF PAINTING.
19)-COLUMN SHOULD BE TRANSPORTED WITH ALL NOZZLES CLOSED AND UNDER NITRIGEN TO PREVENT CORROSION.
20)-ALL BODY FLANGES SHOULD BE MARKED AT 0° INORDER TO ADJUST AT SITE.
21)-FOR PAINTING : (C.S PARTS ONLY)
1) AT SHOP :
a) SURFACE PREPARATION AS PER SP 10
b) PRIMER : INORGANIC ZINC (1x75 MICRO METER).
2)AT FILLED:
a) REPAIRING OF DAMAGED SPOTS:
- SURFACE PREPARATION : SP1 AND SP11;
- ZINC RICH PRIMER (1x 60 MICRO METER).
b) INTERMEDIATE : EPOXY POLYAMIDE MIO FILLED (1 x 100 MICRO METER).
c) FINISH : ALIPHATIC POLYURETHANE (1 x 50 MICRO METER).

DE	EXT	IFE		R	
Eng. Phase	Purpose of Distribution (POD)	Purpose of Issue (POI)		Owner's Action	

REV.	ISSUE DATE	DESCRIPTION	PREPARED BY	CHECKED BY	APPROVED BY	AUTHORIZED BY
C0	06.12.2014	ISSUED FOR ENGINEERING	Z.Shahmirian	A.Elaoufi	A.Elaoufi	A.Kadkhodaei

20-T-2005
GENERAL ASSEMBLY

SCALE : NTS	OWNER PROJ. NO. : BU20	OWNER NO. :	REV.:	SIZE :
SHEET: 1 OF 1	PIDEC PROJ. NO. : 1216	PIDEC NO. : 1216-DE-20-PV-SDG-130	00	A1